FREESTYLE

INSTALLATION GUIDE - KRIS CROSS

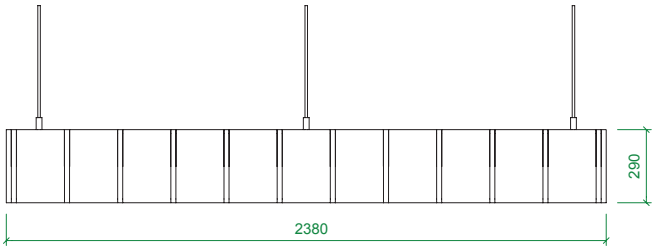

Freestyle baffles
ELEVATION VIEW

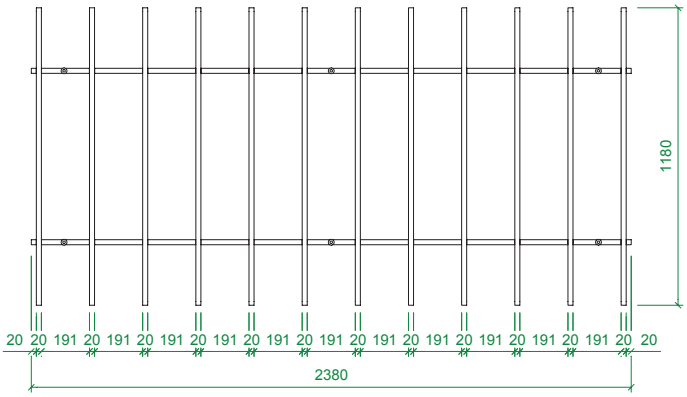

Freestyle baffles
PLAN VIEW

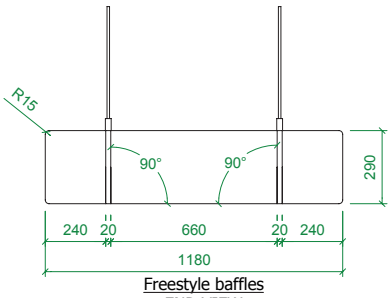

Freestyle baffles
END VIEW

Always wears clean protective gloves when installing this product to ensure the panels are kept clean.

- Lay the larger fins out with the cut side facing up on a clear dry surface.
- One by one slot the shorter fins in place and ensure they are fully slotted into place.
- Turn the raft over and again ensure all fins are slotted in place and the raft is securely fitted together.

- Mark your ceiling points against the raft of where you want it to go.
- Using the screw eyes provided, hard screw into place on the larger slats
- Using a suitable fixing for the ceiling you are suspending from, fix the suspension cable to the ceiling where you've marked.
- Lift the raft into place to meet the cables. Using the snap hook attached to the cable, clip into the screw eyes you've already fixed to the raft.
- Adjust cables to the required height and trim excess wire to suit.

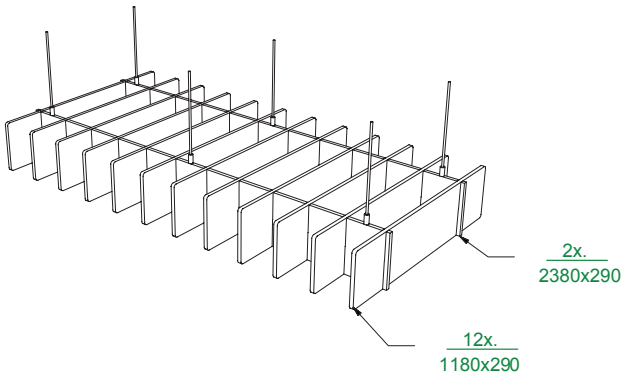

Soundtect Ltd.
First Floor. 3, Albermarle Way, London EC1V 4JB Tel: 0845 548 0518
enquiries@soundtect.com I www.soundtect.com